RV1C WHEEL SUPPORT ASSEMBLY V 2.0

* ##-TO SPECIFY COLOR
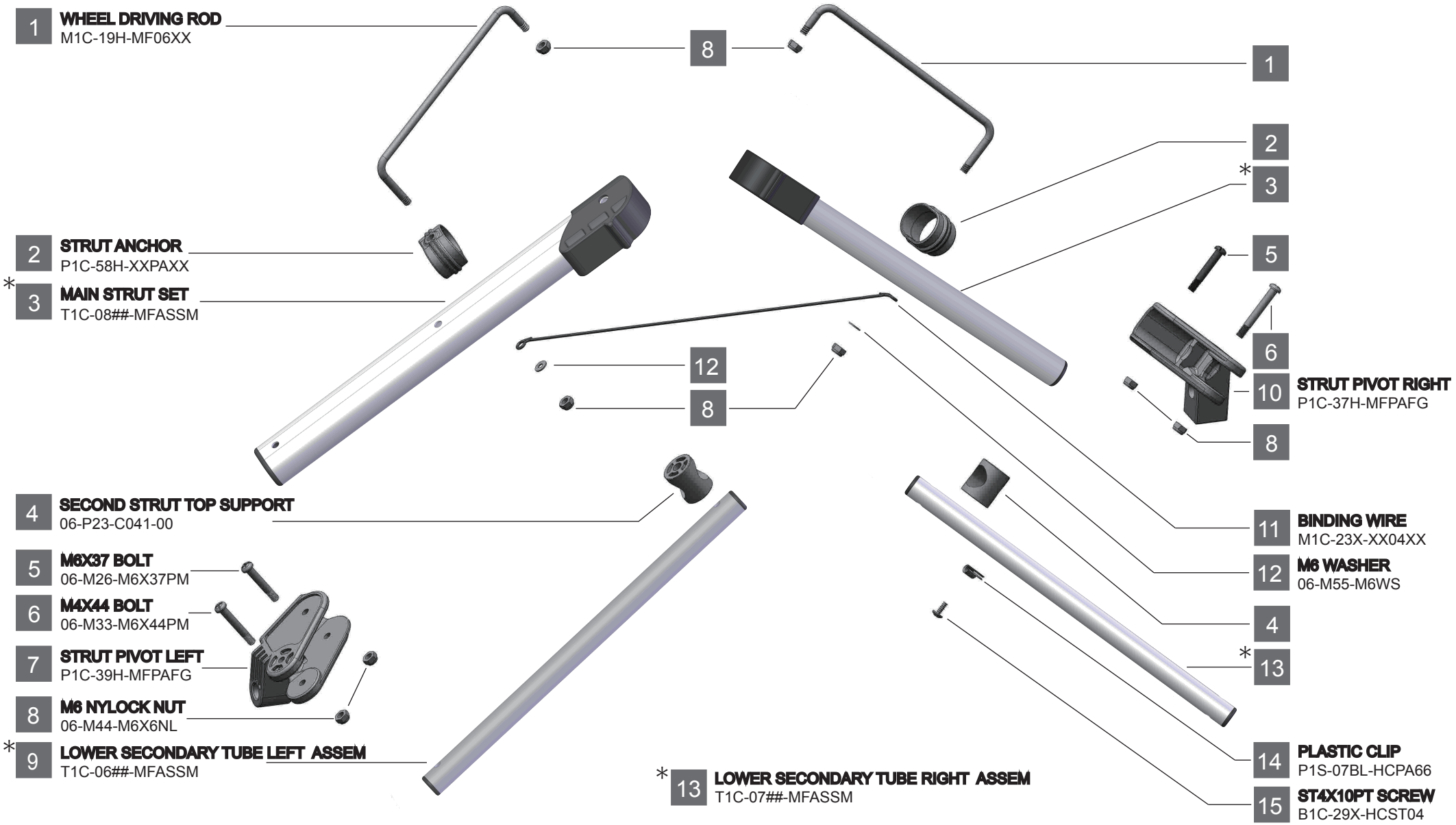
SL-SILVER CH-BLACK AW-WHITE